4-2-96

UVA131 PHOTOMULTIPLIER BASE FOR EMI 9822(Q)KB OR = 9211(Q)KB (2")

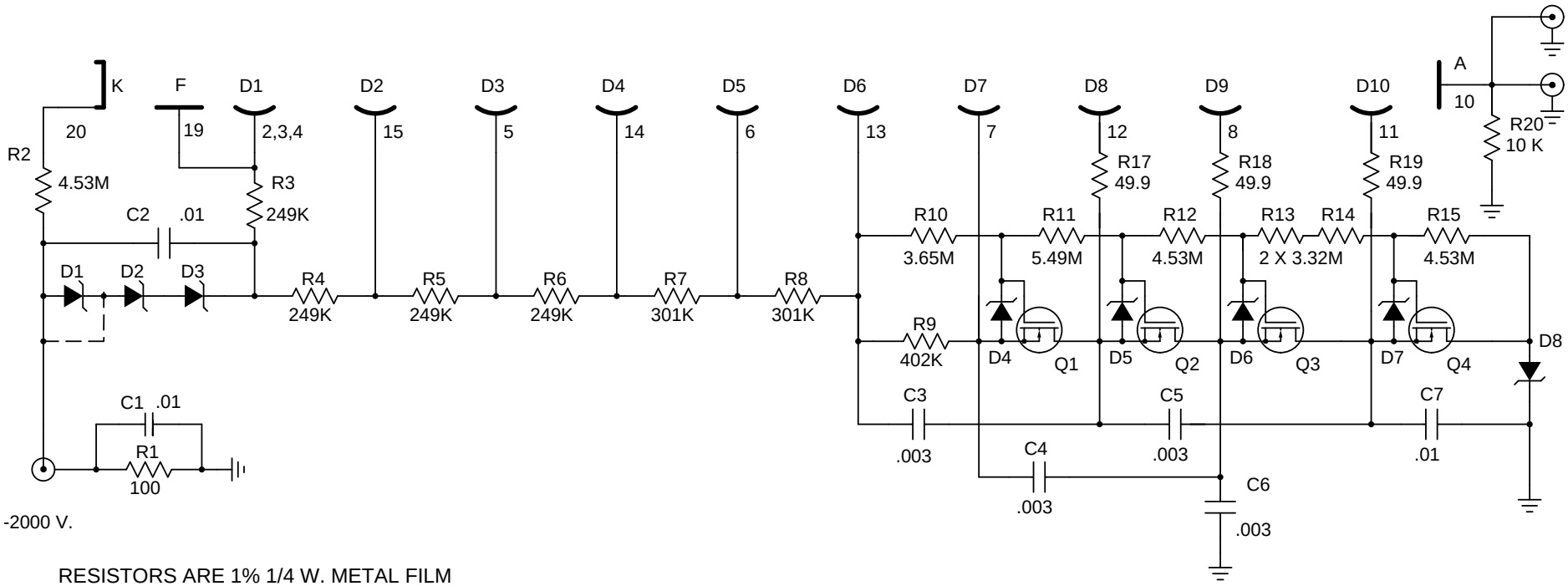

RESISTORS ARE 1% 1/4 W. METAL FILM

D1-D3 AND D8 ARE 1N989B 150V ZENERS

REPLACE D1 WITH JUMPER FOR 9211 2" PMT

D4-D7 ARE 1N751A 5.1V ZENERS

Q1-4 ARE TYPE BSS125 600V MOSFETS

DIVIDER CURRENT IS 260 MICROAMPS. AT -1600 V.